SCHEMATIC NOT FOR CONSTRUCTION

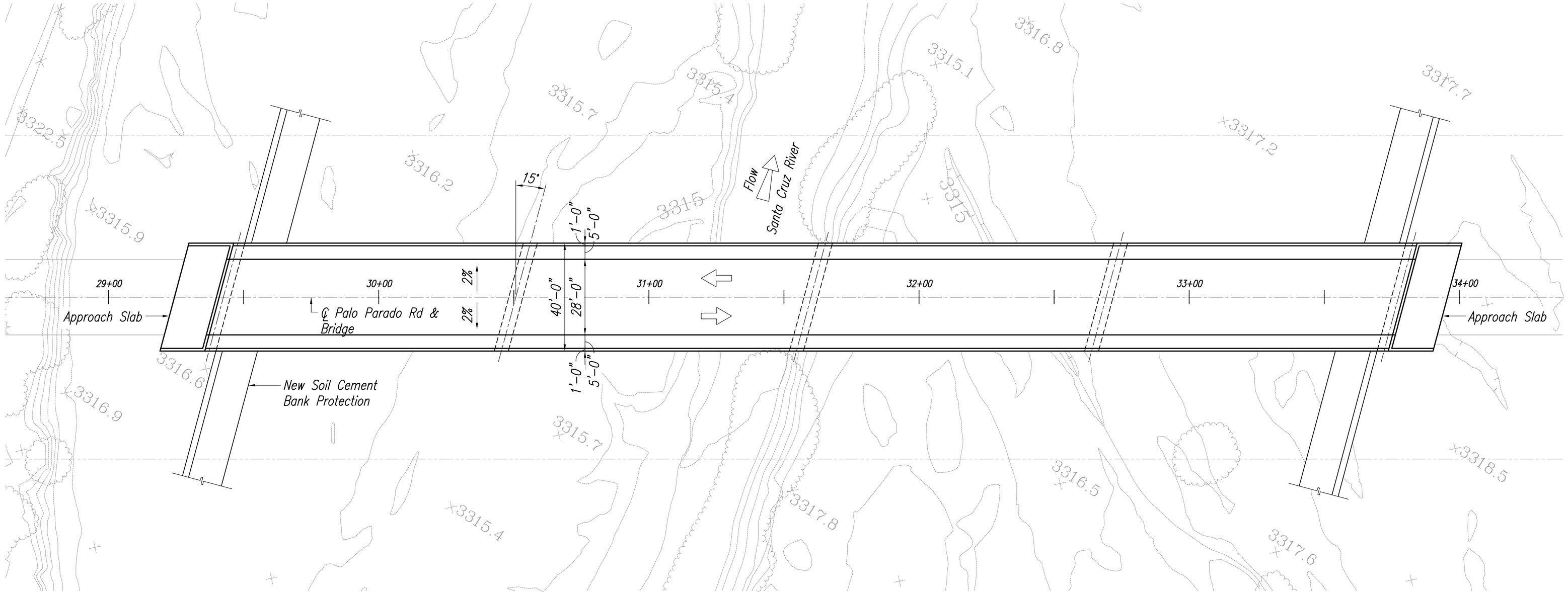

LOCATION PLAN - *New Precast-Prestressed Girder Bridge - AASHTO Type V*
Scale 1" = 20'-0"

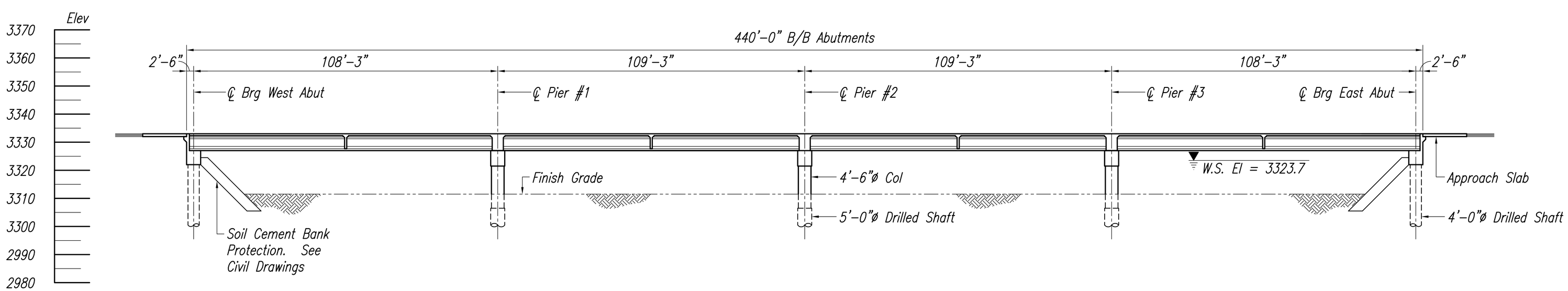

LONGITUDINAL SECTION ALONG CONSTRUCTION CENTERLINE
Scale 1" = 20'-0"

PRELIMINARY
EXPIRES 6/30/2009

Location Plan & Longitudinal Section

Palo Parado Bridge at The Santa Cruz River

STRUCTURAL CONCEPTS INC.
CONSULTING ENGINEERS
(520) 721-6324
(520) 889-5607 FAX
8230 E. BROADWAY SUITE W-7
TUCSON, ARIZONA 85710

Designed by	DRL
Drafted by	JCR
Checked by	DRL
Date	3/26/08
Project No.	08-142

Sheet No.

S1

Sheet 1 of 2

SCI No. 08142S1 - 240